ITEM NO.	PART NUMBER	DESCRIPTION	QTY.
1	PLA 762108-8	Plate Machine Body	1
2	BLO 762093	Block Cassette Stop	4
3	M3SCS16	M3 Socket Cap Screw x 16 Long	10
4	SLE 761042	Sleeve Stop	1
5	STU 762086	Stud Location (107)	2
6	M5SCS25	M5 Socket Cap Screw 25 Long	1
7	M5CSS12	M5 Counter Sunk Screw 12 Long	1
8	ASY 762182	Assembly Linear Belt Tension	1
9	WAS 751031	Washer Brake Arm	2
10	M3SCS12	M3 Socket Cap Screw x 12 Long	5
11	ASY 762270	Assembly Cassette Stop (107)	1
12	M6SCS20	M6 Socket Cap Screw 20 Long	5
13	ELE 762092(B)	Sensor Linear Movement	2
14	M2.5SCS08	M2.5 Socket Cap Screw 08 Long	8
15	ASY 762278	Assembly Printhead Support (107M & L)	1
16	ASY 762283	Assembly D' Connector Block (M & L)	1
17	M6SCS25	M6 Socket Cap Screw 25 Long	1
18	M6WASSHK	M6 Shakeproof Washer	1
19	M6WAS	M6 Stainless Steel Washer	1
20	M6NUT	M6 Full Nut	1
21	SOC 762149	Socket Guard Support	2
22	ASY 762179	Assembly Ribbon Motor(INT)	1
23	M4SCS16	M4 Socket Set Screw 16 Long	4
24	ASY 762180	Assembly Linear Motor (INT)	1
25	BEL 762068	Belt 160 Print	1
26	SPR 530012	Spring	2
27	ASY 762181	Assembly Pressure Motor	1
28	M3SCS10	M3 Socket Cap Screw x 10 Long	2
29	SPA 762166	Hexagonal PCB Spacer	4
30	PCB 762371	Interconnect Board Assembly	1
31	BAR 762049	Bar Linear Support	1
32	M4SCS25	M4 Socket Cap Screw 25 Long	4
33	RAI 762171	Linear Slide Rail (L)	1
34	M3SCS08	M3 Socket Cap Screw x 08 Long	13
35	ASY 762272	ASSEMBLY LINEAR CARRAGE (107)	1
36	ASY 762275	Assembly Vertical (107L)	1
37	M3SCS25	M3 Socket Cap Screw x 25 Long	2
38	BEL 762065	Belt Drive 107 Pressure	1
39	ASY 762200	Assembly Printhead (107)	1
40	ASY 765152	Assembly Print & Processor Complete	1
41	M3SCS06	M3 Socket Cap Screw x 06 Long	11
42	GUA 762119	Guard LH (107L)	1
43	GUA 762120	Guard RH (107L)	1
44	PLA 762210	Plate Ribbon Clamp (L)	1
45	M3BHS06	M3 Button Head Screw 06 Long	2
46	GUA 762474	Back Guard Universal 53 & 107 L)	1
47	M4BHS08	M4 Button Head Screw 08 Long	3
48	ASY 762505	Assembly USB-B Connectors	1
49	ASY 762267	Assembly Linear Sensor	2
50	SPR 762088	Spring	2
51	LAB 763087	Power Supply CE Label	1

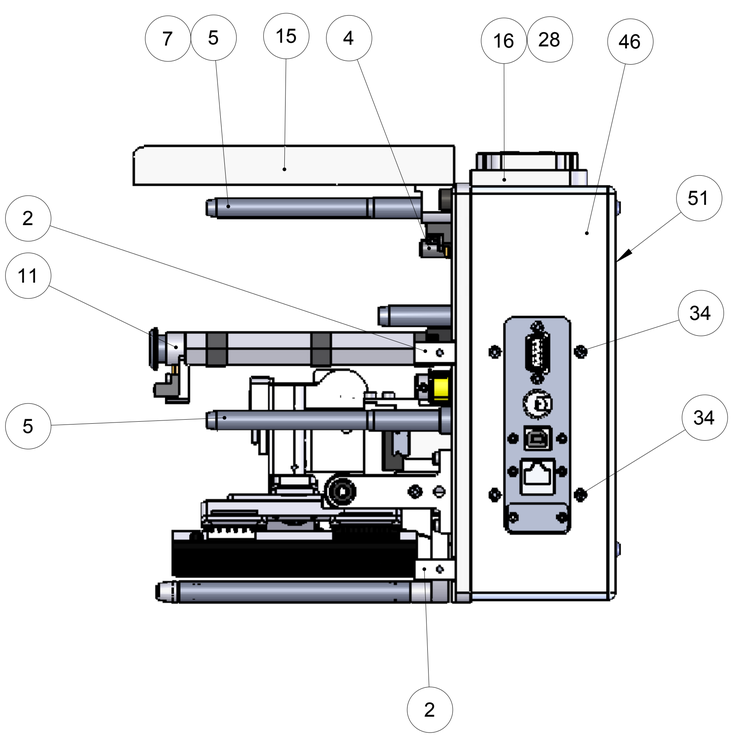

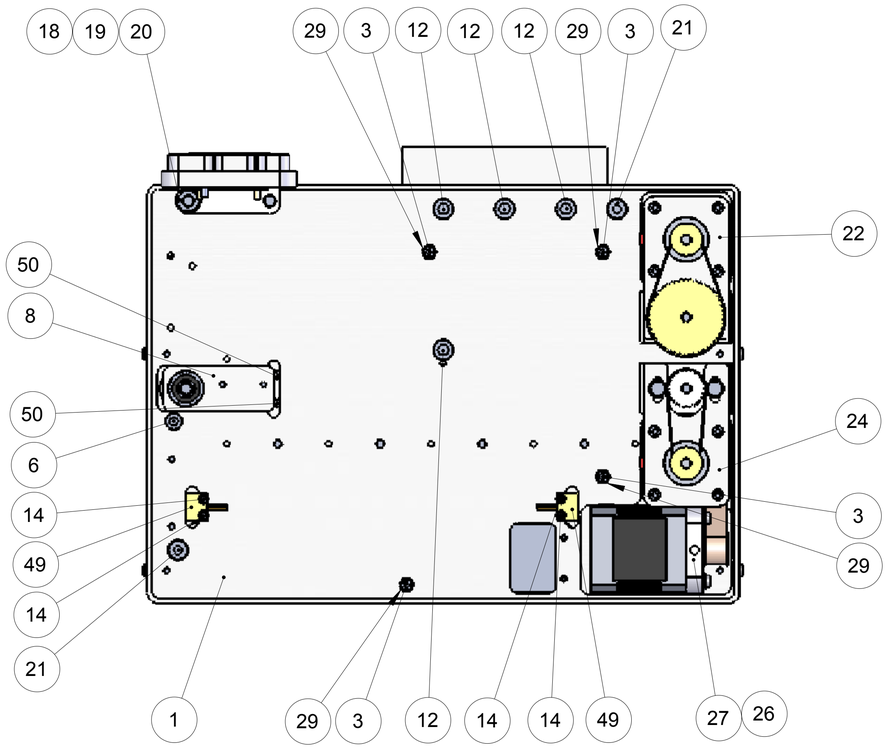

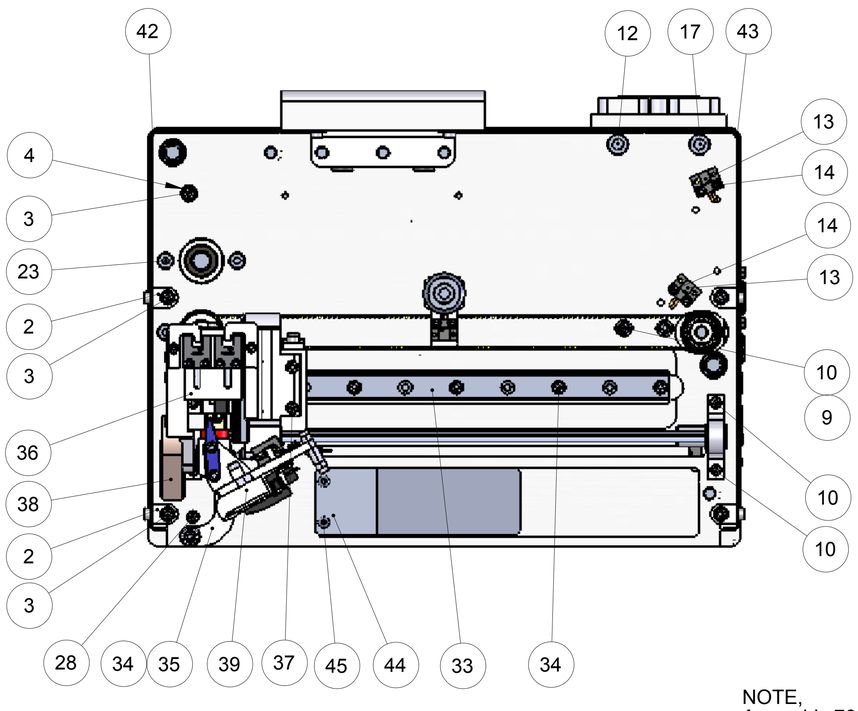

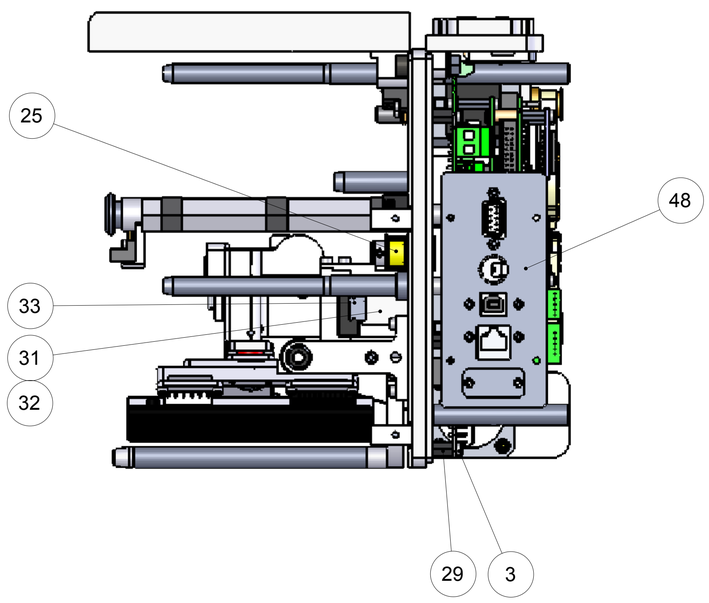

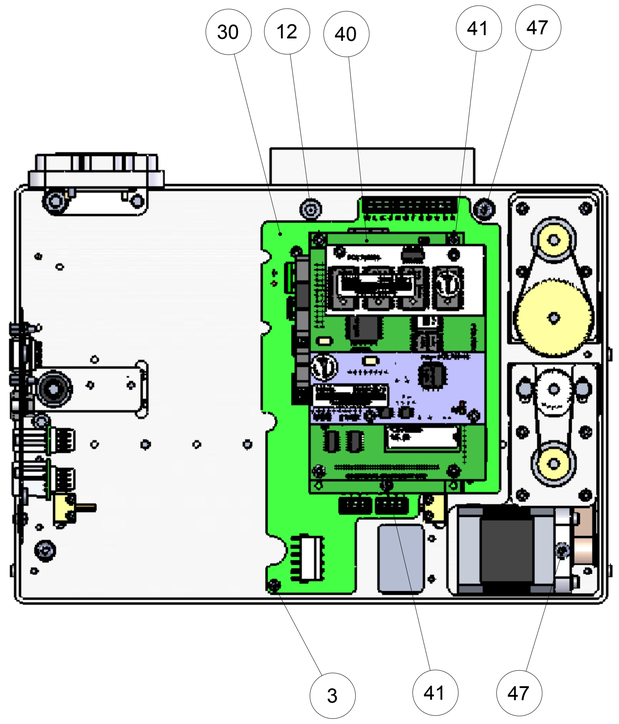

NOTE,
Assembly 762232,762240, 762237,
are Omitted from Drawing.

UNLESS OTHERWISE SPECIFIED: DIMENSIONS ARE IN MILLIMETERS SURFACE FINISH: TOLERANCES: LINEAR: ANGULAR:	FINISH: None	DEBUR AND BREAK SHARP EDGES	DO NOT SCALE DRAWING — REVISION 6
NAME: Colin Plimsaul — DATE: 13JUN2007			TITLE: Assembly Printer Body 107L
CHK'D			
APPV'D			
MFG			
Q.A	MATERIAL: See Parts List		DWG NO. ASY 762005 — QTY 1
DCR			
	WEIGHT:		SCALE:1:1.5 — SHEET 1 OF 1 — MODEL: Thermocoder — A1