ITEM NO.	PART NUMBER	DESCRIPTION	QTY.
1	PLA 762320	Plate Machine Body (Conti)(RH)	1
2	BLO 762093	Block Cassette Stop	4
3	M3SCS16	M3 Socket Cap Screw x 16 Long	13
4	SLE 761042	Sleeve Stop	1
5	STU 762351	Stud Location (53)	2
6	M5CSS12	M5 Counter Sunk Screw 12 Long	1
7	M5SCS25	M5 Socket Cap Screw 25 Long	1
8	ASY 762269	Assembly Cassette Stop (53)	1
9	M6SCS20	M6 Socket Cap Screw 20 Long	2
10	ELE 762092(B)	Sensor Linear Movement	2
11	M2.5SCS08	M2.5 Socket Cap Screw 08 Long	4
12	ASY 762338	Assembly Printhead Support (53CR)	1
13	M6SCS25	M6 Socket Cap Screw 25 Long	2
14	M6CSS20	M6 Counter Sunk Screw 20 Long	1
15	ASY 762318	Assembly Connector Block (Conti)	1
16	M6WASSHK	M6 Shakeproof Washer	1
17	M6WAS	M6 Stainless Steel Washer	1
18	M6NUT	M6 Full Nut	1
19	SOC 762148	Socket Guard Support	1
20	SOC 762149	Socket Guard Support	1
21	ASY 762336	Assembly Ribbon Motor C (RH)	1
22	M4SCS16	M4 Socket Set Screw 16 Long	4
23	SPR 520012	Spring	2
24	ASY 762337	Assembly Pressure Motor C (RH)	1
25	M3SCS12	M3 Socket Cap Screw x 12 Long	2
26	ASY 762343	Assembly Vertical (53C)(RH)	1
27	BEL 762064	Belt Drive 53 Pressure	1
28	ASY 762345	Assembly Printhead (53C) (R/H)	1
29	BLO 762292	Block Roller Support	1
30	M4SCS12	M4 Socket Set Screw 12 Long	3
31	STU 761025	Stub Foil Guide 53	1
32	ASY 761106	Assembly Foil Guide (53)	1
33	SLE 761027	Sleeve Foil Guide	1
34	M3SCS08	M3 Socket Cap Screw x 08 Long	3
35	BLO 762295	Block Ribbon Support	1
36	PLA 762297	Plate Ribbon Guide 53	1
37	M3SCS06	M3 Socket Cap Screw x 06 Long	11
38	BLO 762099	Block 26 Way Ribbon Cable	1
39	BRA 762360	Angle Bracket 53C	1
40	M3SCS05	M3 Socket Cap Screw x 05 Long	2
41	BRU 762363	Brush Antistatic 53C	1
42	M3BHS06	M3 Button Head Screw 06 Long	4
43	GUA 762328	Guard (Conti)(RH) 53	1
44	GUA 762329	Guard (Conti)(LH)	1
45	SPA 762166	Hexagonal PCB Spacer	4
46	PCB 762333	Assembly Interconnect (RH)	1
47	ASY 765152	Assembly Print & Processor Complete	1
48	GUA 762497	Back Guard Universal 53CR	1
49	M4BHS08	M4 Button Head Screw 08 Long	3
50	M3SCS10	M3 Socket Cap Screw x 10 Long	1
51	ASY 762535	Assembly USB-B Connector (RH)	1

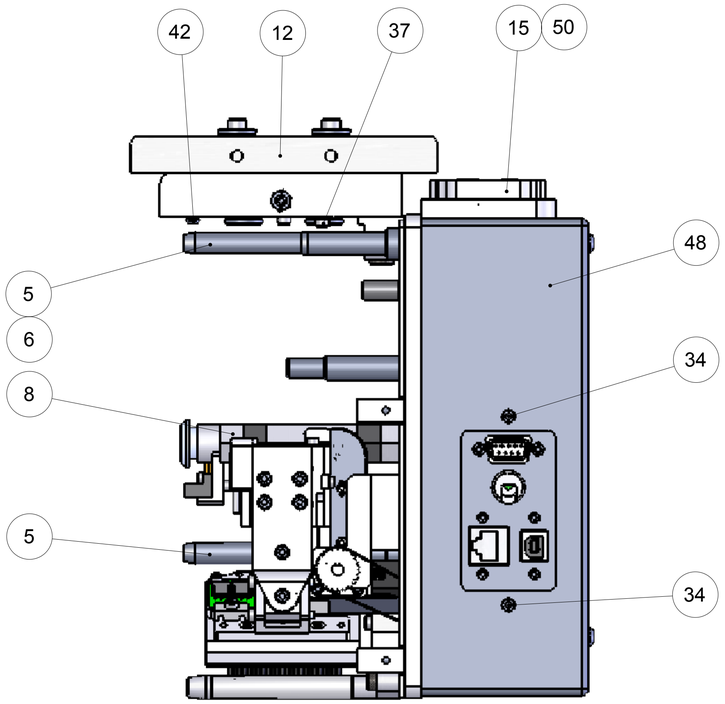

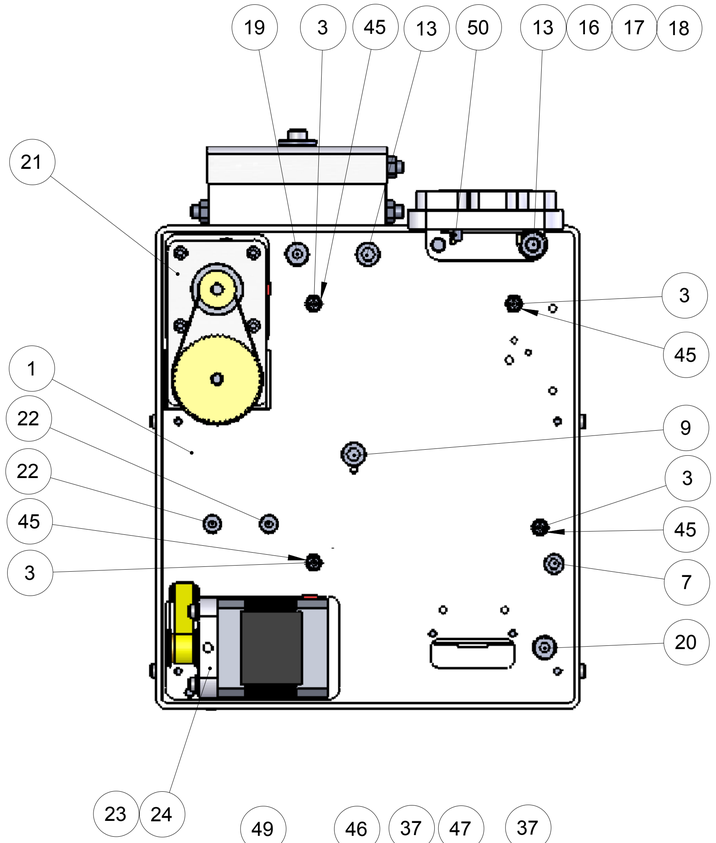

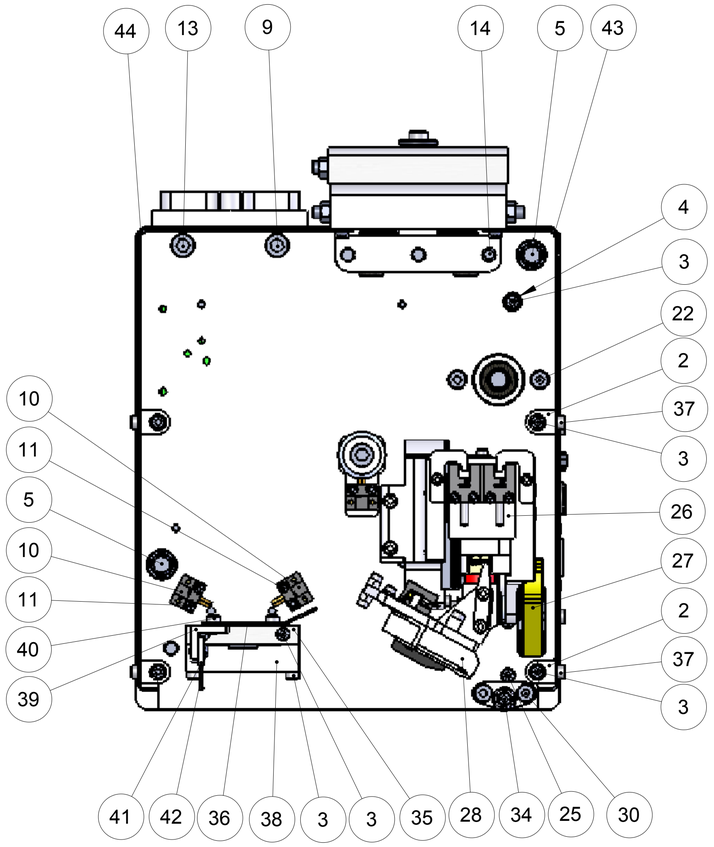

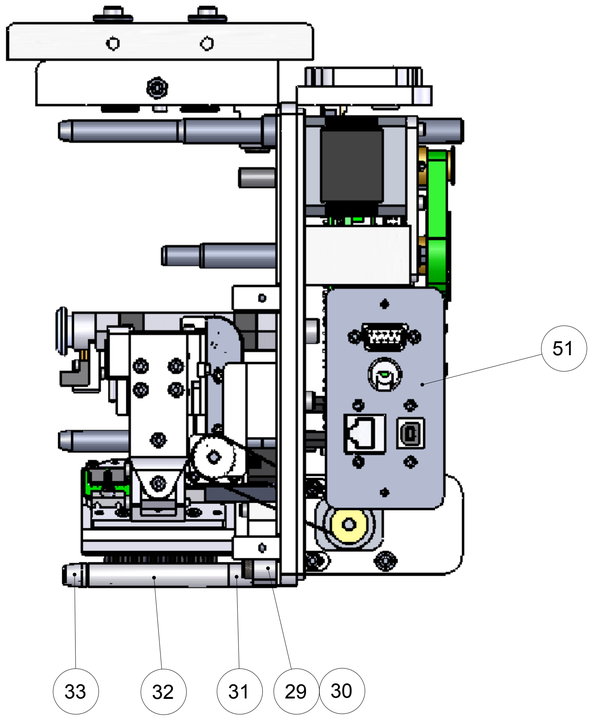

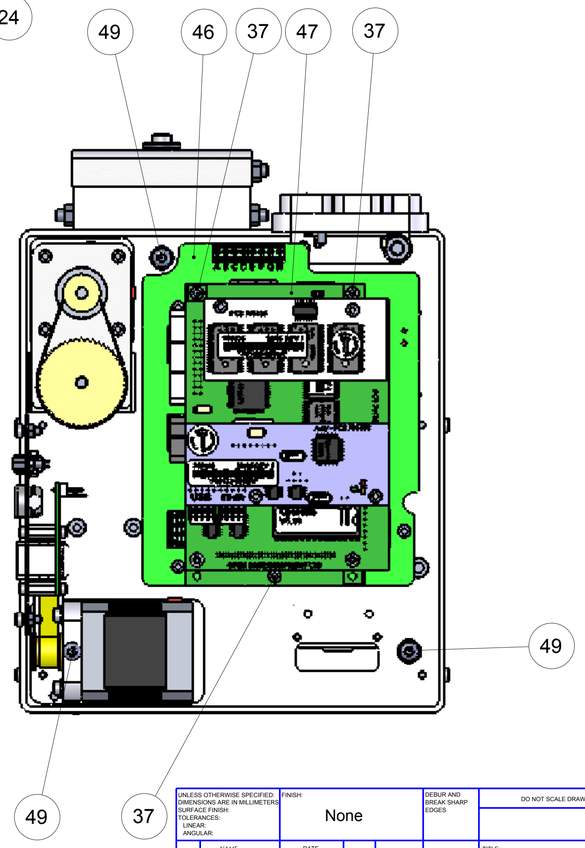

NOTE
Assembly 762230, 762241,
are Omitted from Drawing

UNLESS OTHERWISE SPECIFIED: DIMENSIONS ARE IN MILLIMETERS SURFACE FINISH: TOLERANCES: LINEAR: ANGULAR:	FINISH: None	DEBUR AND BREAK SHARP EDGES	DO NOT SCALE DRAWING — REVISION 3
NAME: Colin Plimsaul — DATE: 09AUG2007			TITLE: Assembly Printer Body (53CR)
CHK'D			
APPV'D			
MFG			
Q.A		MATERIAL: See Parts List	DWG NO. ASY 762008-3 — QTY 1
		WEIGHT:	SCALE:1:1.3 — SHEET 1 OF 1 — MODEL:- Thermocode — A1